DATE Sept. 25, 2006	OUTLINE DIMENSIONS	MOTOR TYPE: AEHH8N-CF
Cat. #: EP0024C	3-PHASE INDUCTION MOTOR	FRAME NO. 145TC

Pole	HP	kW	Hz	VOLT	Syn. Speed r/min(rpm)
4	2	1.5	60	230/460	1800

Ins	Rating	Dimension in	Approx Weight	Bearings
F	CONT.	inches	65 lbs	DE: 6205ZZ NDE: 6205ZZ

Totally Enclosed Fan-Cooled Type, Squirrel-Cage Rotor.

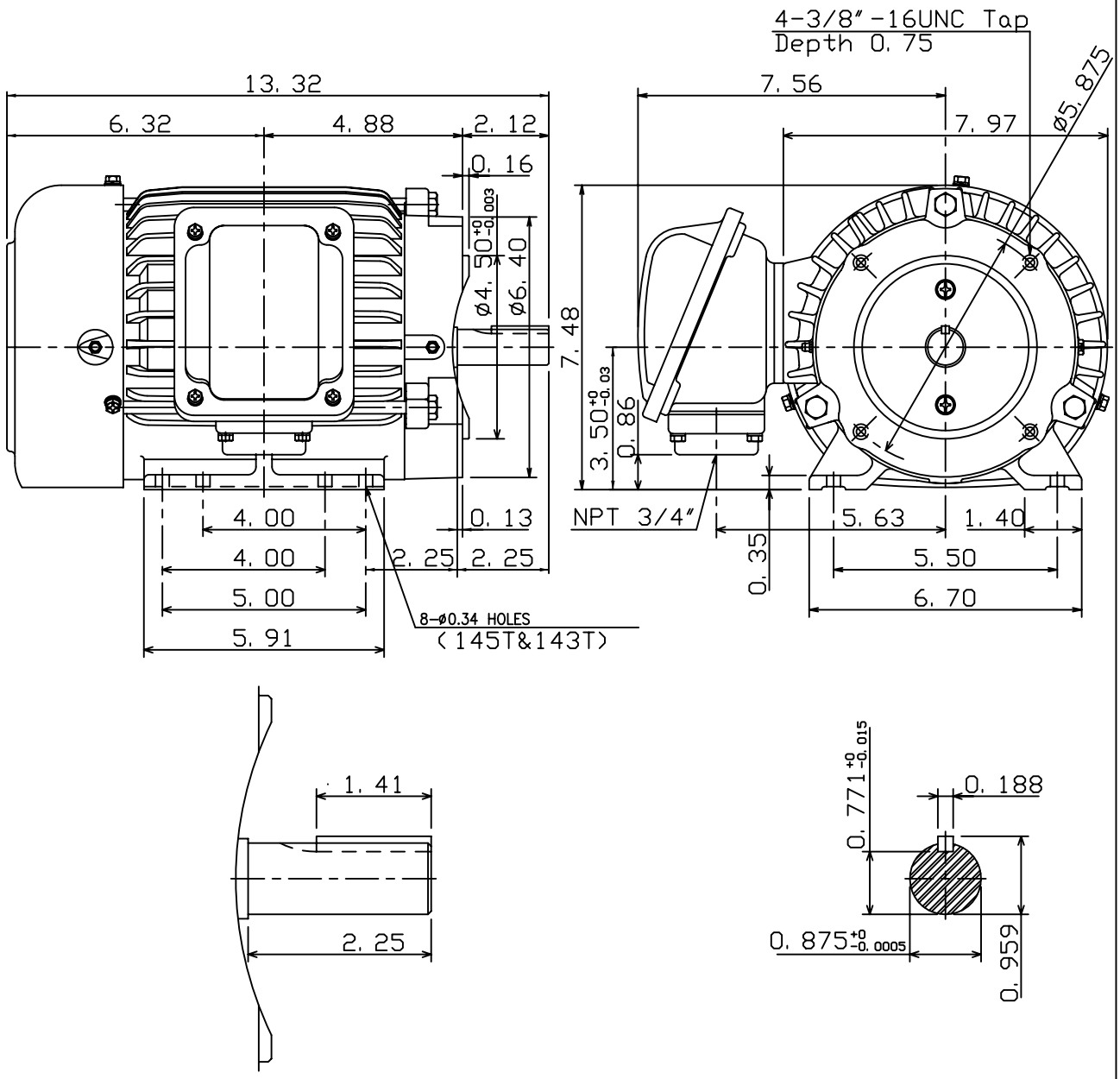

DWN.	C. S. LO	12-22-04	TECO Westinghouse	DWG NO.
CHKD.	C. S. LO	12-27-04		31049J806230
APPD.	M. C. TSAI	12-27-04		